- **Sepcification**
- .374" PCB Barrier Terminal Blocks
- Terminal style : M11
- Pitch : 9.50 mm

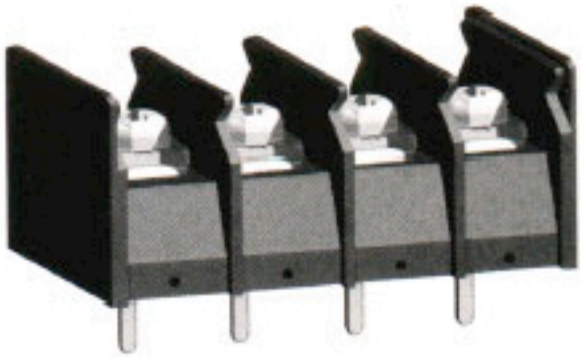

益成自動控制材料行 http://sale.enproteko.com

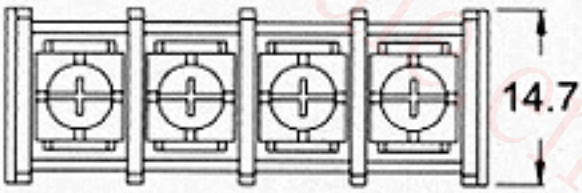

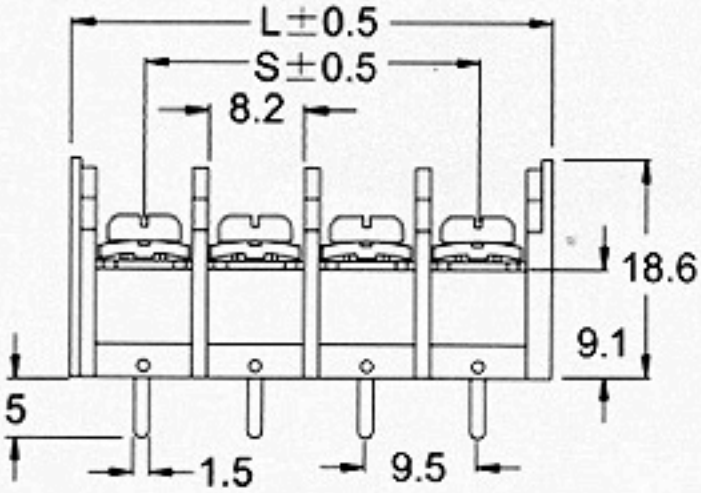

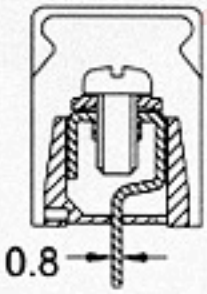

Poles	2	3	4	5	6	7	8	9	10	11	12	13	14	15	16
L(mm)	22.0	31.5	41.0	50.5	60.0	69.5	79.0	88.5	98.0	107	117				
S(mm)	9.50	19.0	28.5	38.0	47.5	57.0	66.5	76.0	85.5	95.0	105				
Poles	17	18	19	20	21	22	23	24	25	26	27	28	29	30	
L(mm)															
S(mm)															

- **Sepcification**
- .374" PCB Barrier Terminal Blocks
- Terminal style : M24
- Pitch : 9.50 mm

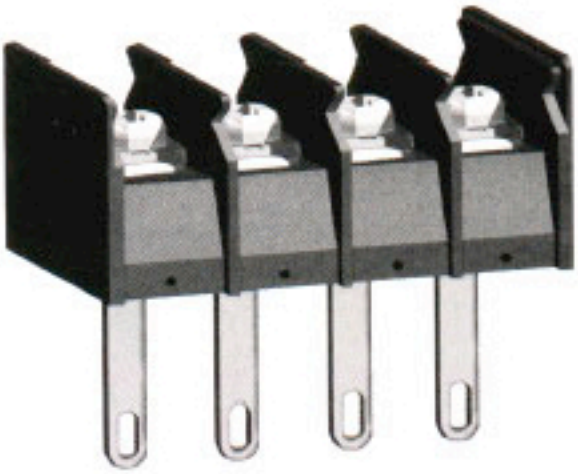

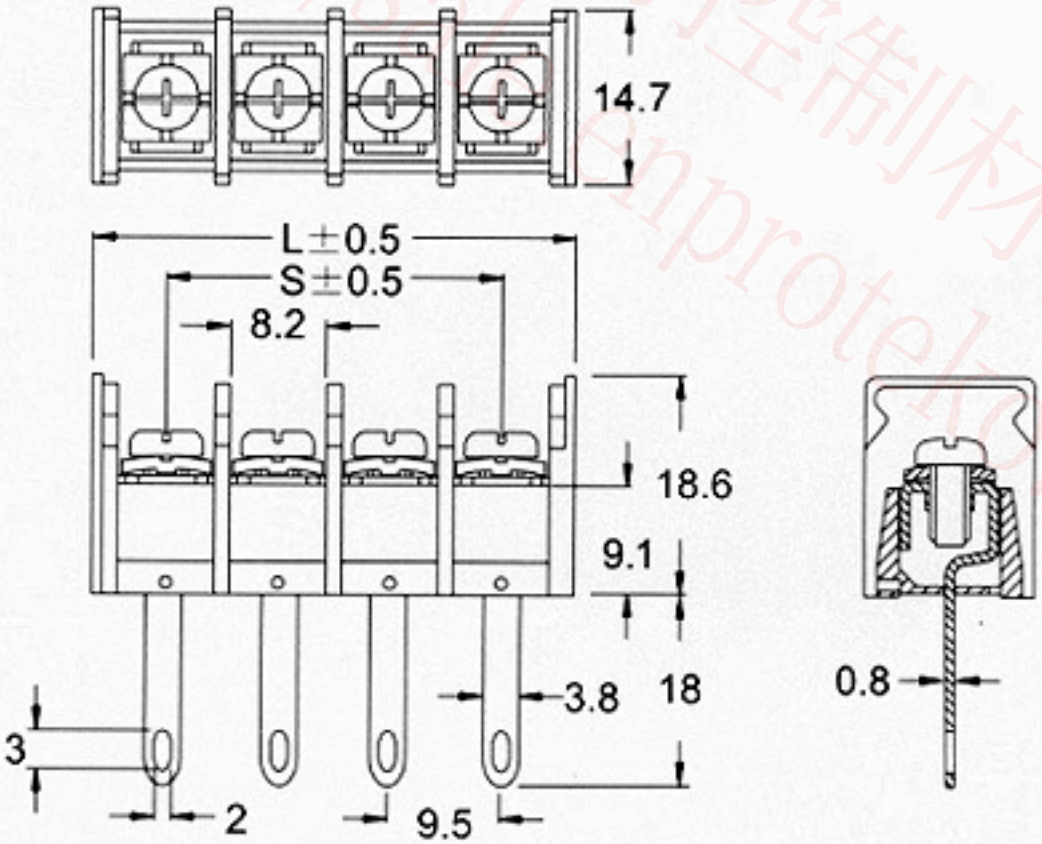

Poles	2	3	4	5	6	7	8	9	10	11	12	13	14	15	16
L(mm)	22.0	31.5	41.0	50.5	60.0	69.5	79.0	88.5	98.0	107	117				
S(mm)	9.50	19.0	28.5	38.0	47.5	57.0	66.5	76.0	85.5	95.0	105				
Poles	17	18	19	20	21	22	23	24	25	26	27	28	29	30	
L(mm)															
S(mm)															

益成自動控制材料行 http://sale.enproteko.com

- **Sepcification**
- .374" PCB Barrier Terminal Blocks
- Terminal style : M25
- Pitch : 9.50 mm

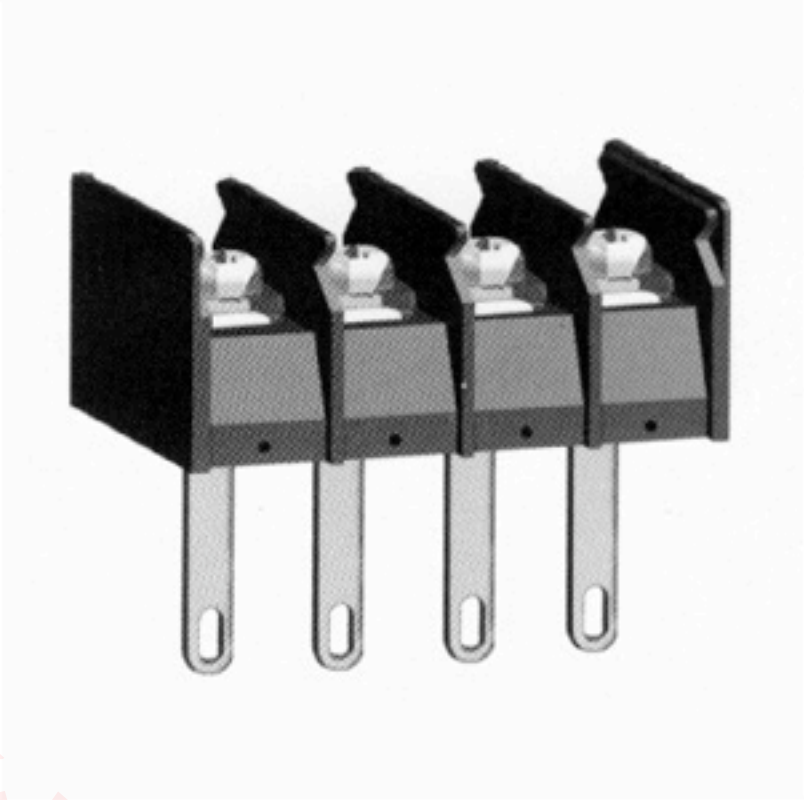

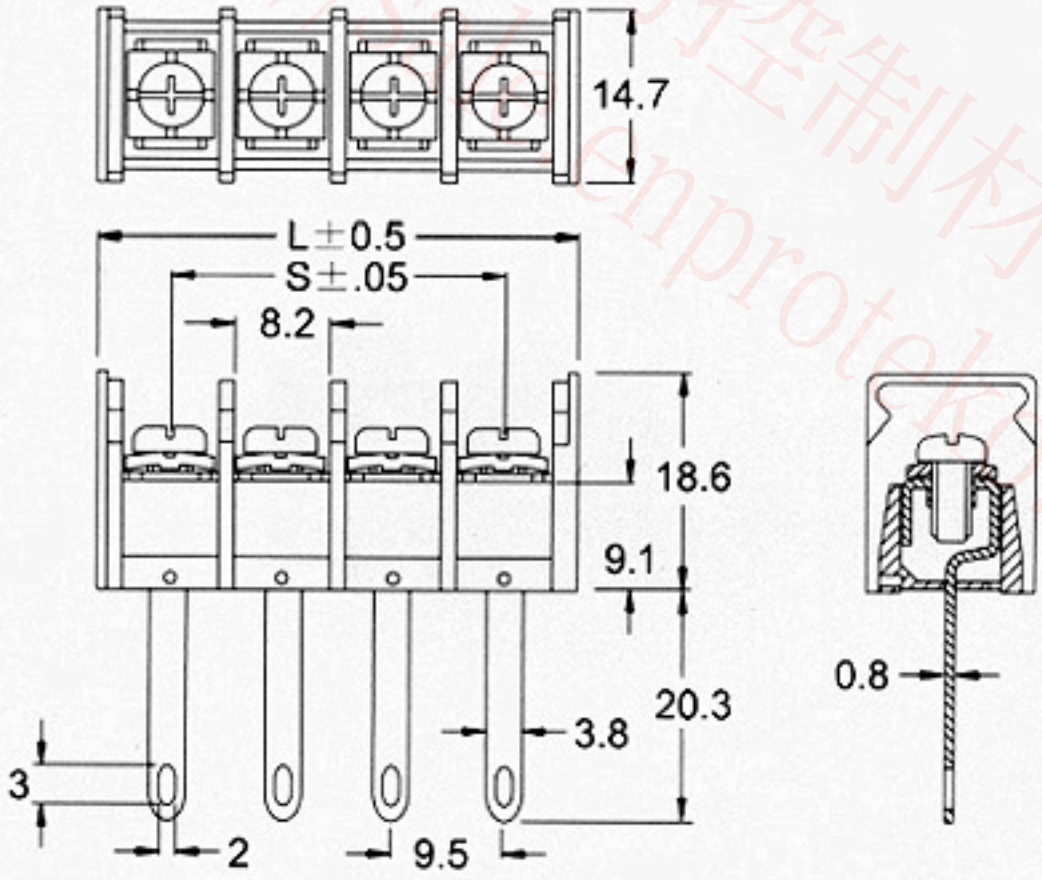

Poles	2	3	4	5	6	7	8	9	10	11	12	13	14	15	16
L(mm)	22.0	31.5	41.0	50.5	60.0	69.5	79.0	88.5	98.0	107	117				
S(mm)	9.50	19.0	28.5	38.0	47.5	57.0	66.5	76.0	85.5	95.0	105				
Poles	17	18	19	20	21	22	23	24	25	26	27	28	29	30	
L(mm)															
S(mm)															

益成自動控制材料行 http://sale.enproteko.com

- **Sepcification**
- .374" PCB Barrier Terminal Blocks
- Terminal style : M31
- Pitch : 9.50 mm

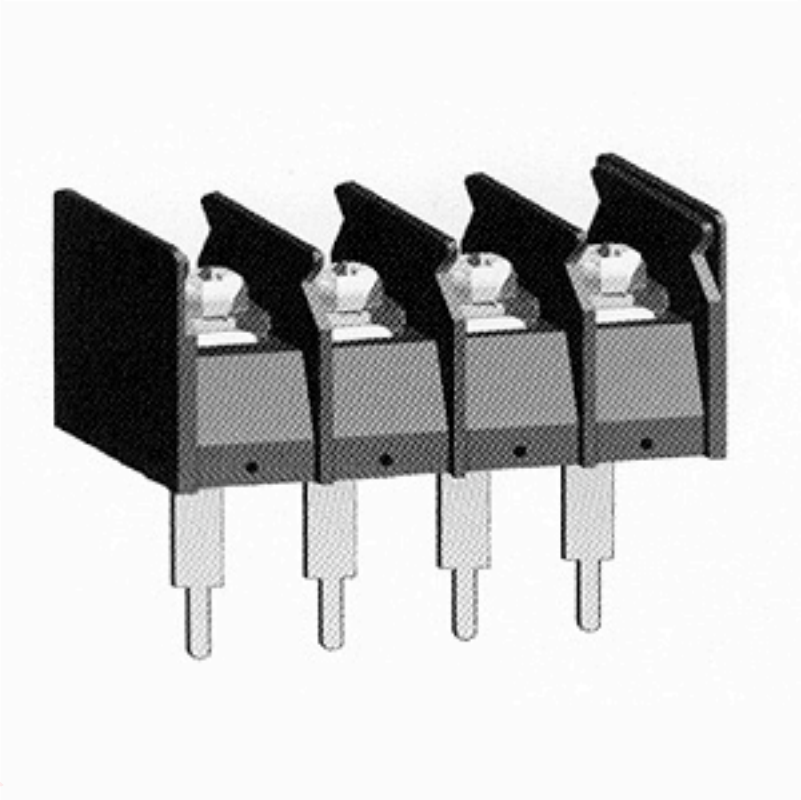

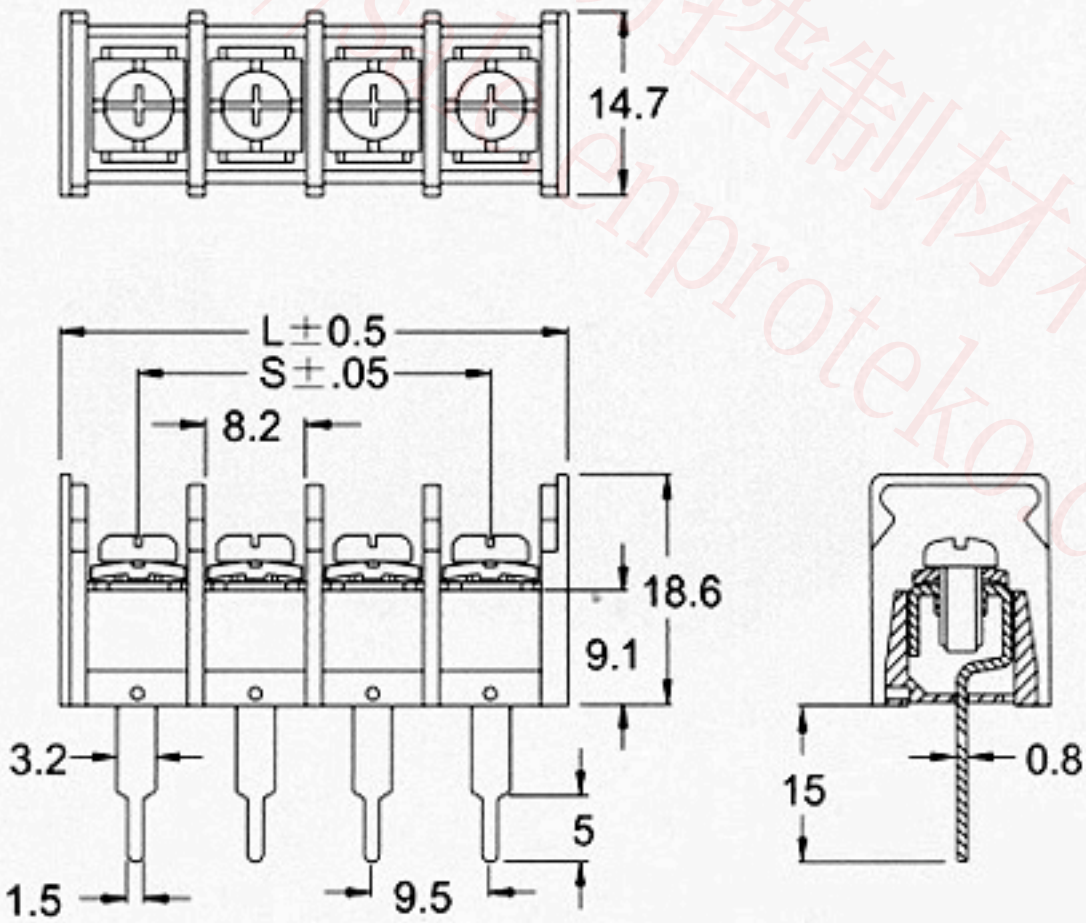

Poles	2	3	4	5	6	7	8	9	10	11	12	13	14	15	16
L(mm)	22.0	31.5	41.0	50.5	60.0	69.5	79.0	88.5	98.0	107	117				
S(mm)	9.50	19.0	28.5	38.0	47.5	57.0	66.5	76.0	85.5	95.0	105				
Poles	17	18	19	20	21	22	23	24	25	26	27	28	29	30	
L(mm)															
S(mm)															

益成自動控制材料行 http://sale.enproteko.com

- **Sepcification**
- .374" PCB Barrier Terminal Blocks
- Terminal style : O31
- Pitch : 9.50 mm

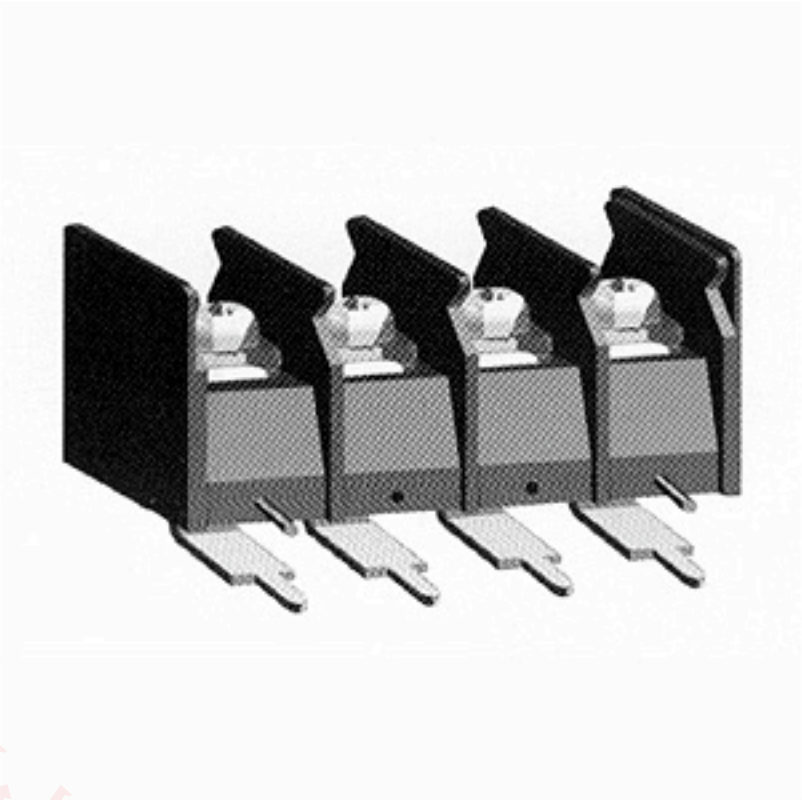

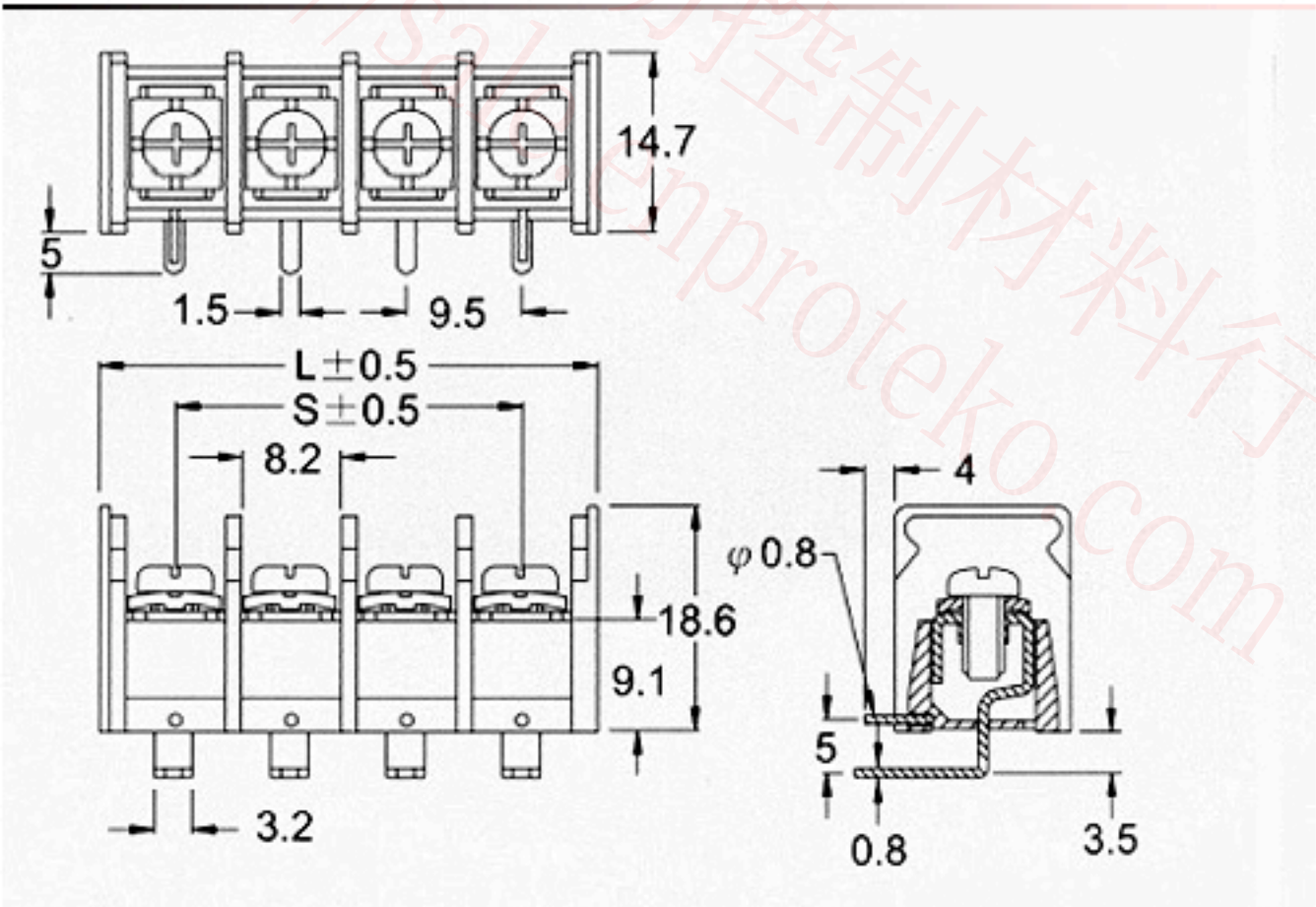

Poles	2	3	4	5	6	7	8	9	10	11	12	13	14	15	16
L(mm)	22.0	31.5	41.0	50.5	60.0	69.5	79.0	88.5	98.0	107	117				
S(mm)	9.50	19.0	28.5	38.0	47.5	57.0	66.5	76.0	85.5	95.0	105				
Poles	17	18	19	20	21	22	23	24	25	26	27	28	29	30	
L(mm)															
S(mm)															

益成自動控制材料行 http://sale.enproteko.com

- **Sepcification**
- .374" PCB Barrier Terminal Blocks
- Terminal style : S11
- Pitch : 9.50 mm

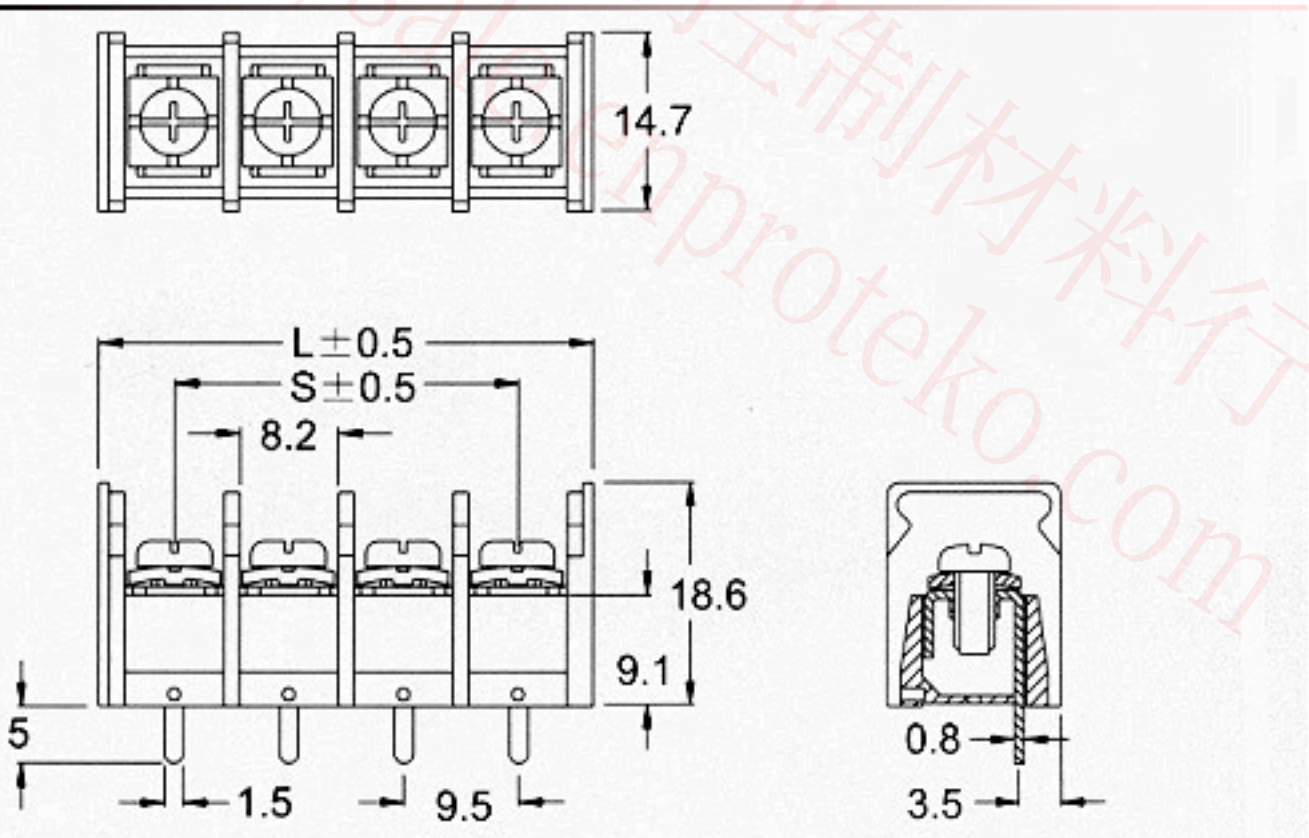

Poles	2	3	4	5	6	7	8	9	10	11	12	13	14	15	16
L(mm)	22.0	31.5	41.0	50.5	60.0	69.5	79.0	88.5	98.0	107	117				
S(mm)	9.50	19.0	28.5	38.0	47.5	57.0	66.5	76.0	85.5	95.0	105				
Poles	17	18	19	20	21	22	23	24	25	26	27	28	29	30	
L(mm)															
S(mm)															

益成自動控制材料行 http://sale.enproteko.com